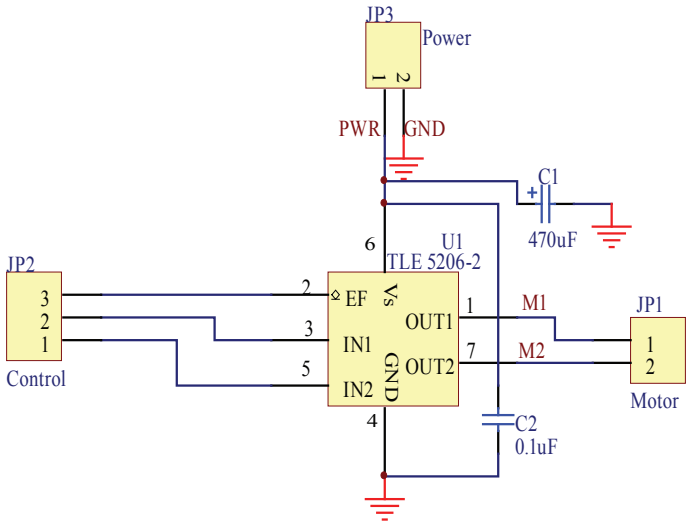
JP3
Power
1
2
PWR
GND
C1
470uF
6
U1
TLE 5206-2
JP2
3
2
1
Control
2
EF
Vs
3
IN1
OUT1
1
M1
JP1
1
2
Motor
5
IN2
GND
OUT2
7
M2
4
C2
0.1uF